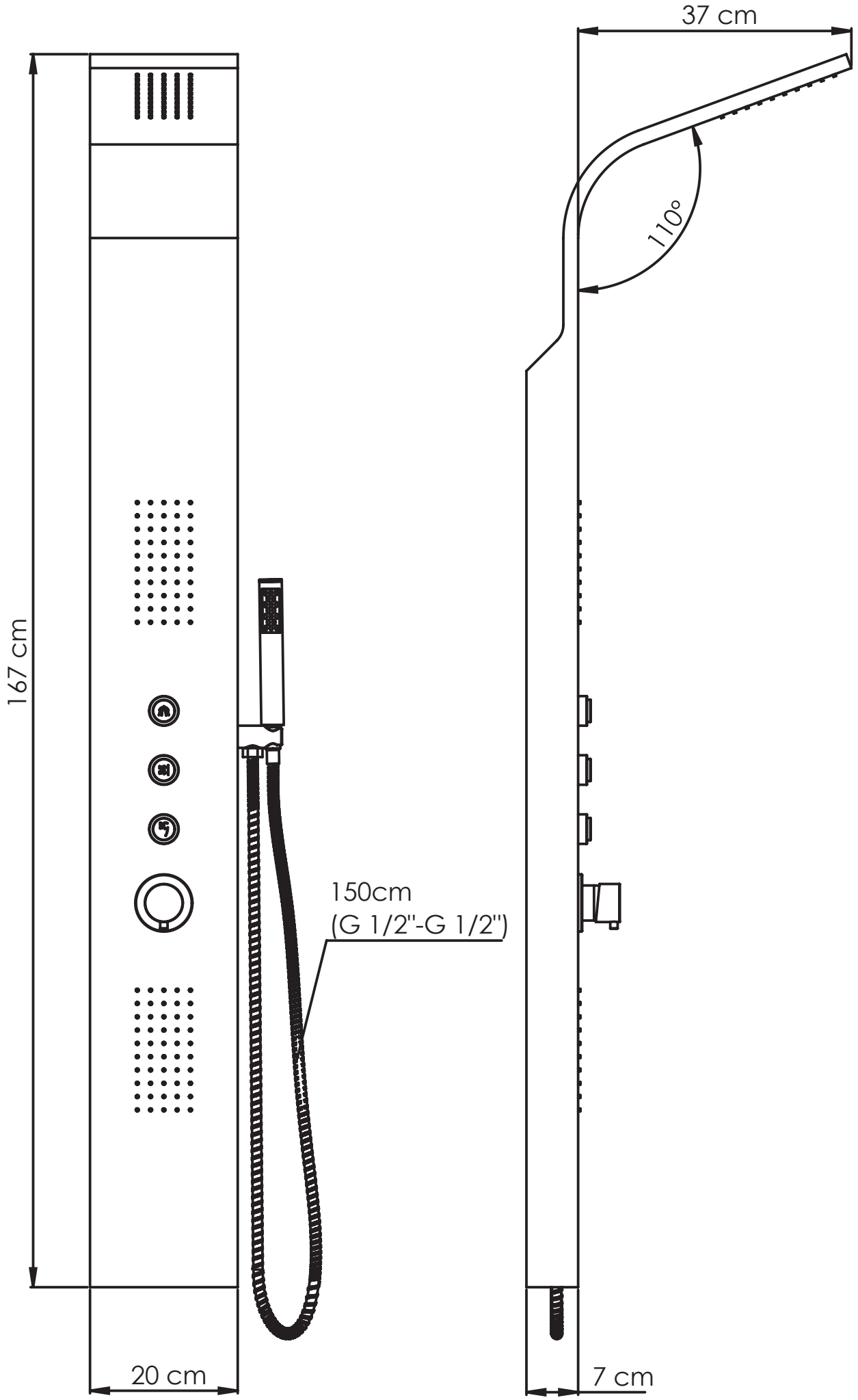
37 cm
110°
167 cm
150cm
(G 1/2"-G 1/2")
20 cm
7 cm